URANIUM CORPORATION OF INDIA LIMITED,JADUGUDA

(A GOVT. OF INDIA ENTERPRISE,DEPT. OF ATOMIC ENERGY)

SUBJECT:-POLYPROPYLENE PLUG FOR DRUM FILTER		DRAWING NO.:-UCI/M-000/C
DATE:-24/02/2017	SCALE:-NTS	REVISION:-'B'
DRAWN BY:-K.S.MULLICK	CHFCKED BY:-	APPROVED BY:-

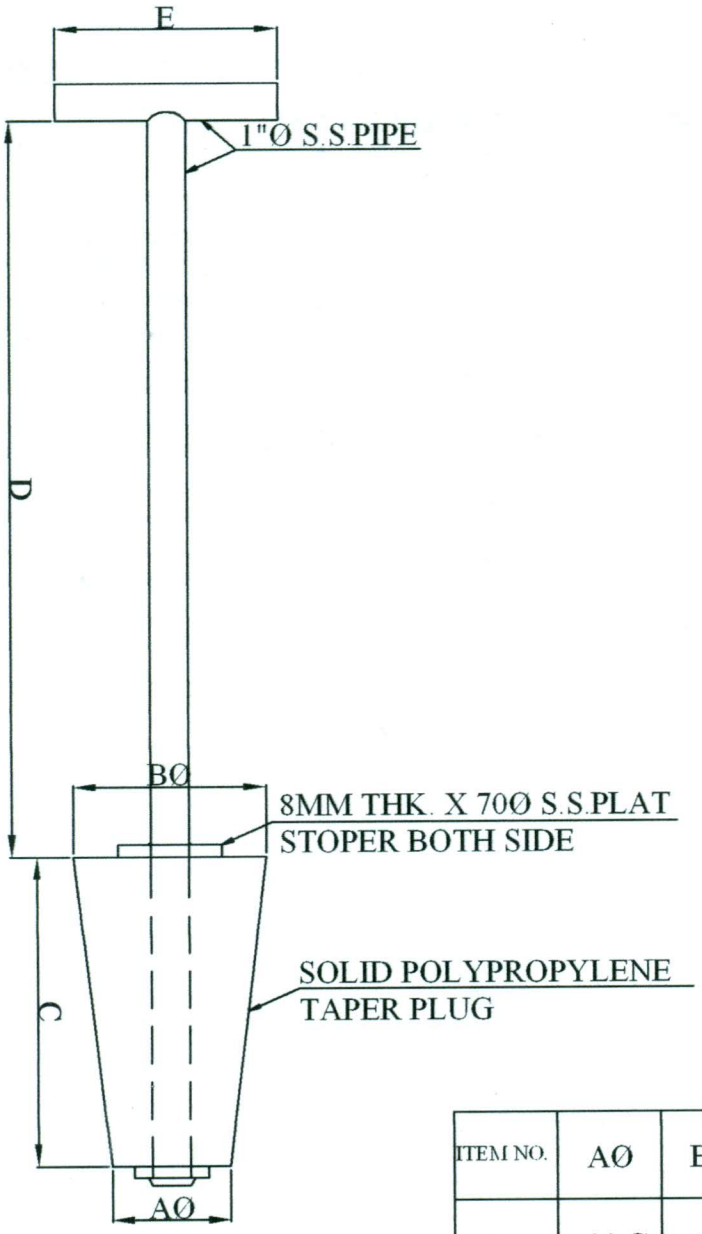

NOTE

MOC of Pipe- S.S-316

Pipe schedule- 40

ITEM NO.	AØ	BØ	C	D	E
1.	80 Ø	130 Ø	210	1000	150